A 40mm Ø 8mm x76 C x40 E x12 G 16mm x20 J x4 L 30mm x8

B 110 mm x38 D Ø 10mm x4 F x4 I 32 mm x12 K 70mm x4 M x2

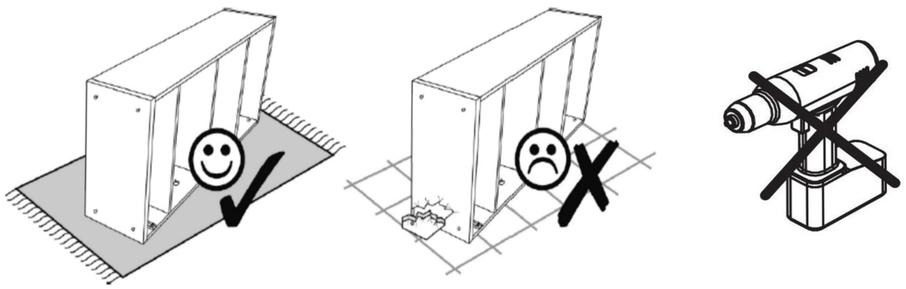

1.

2x

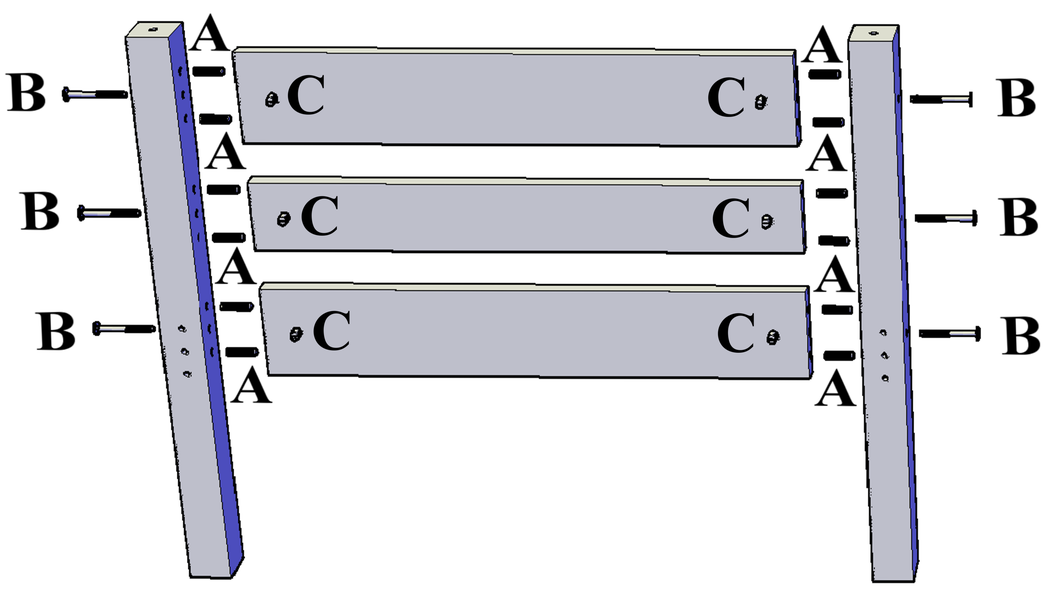

2.

2x

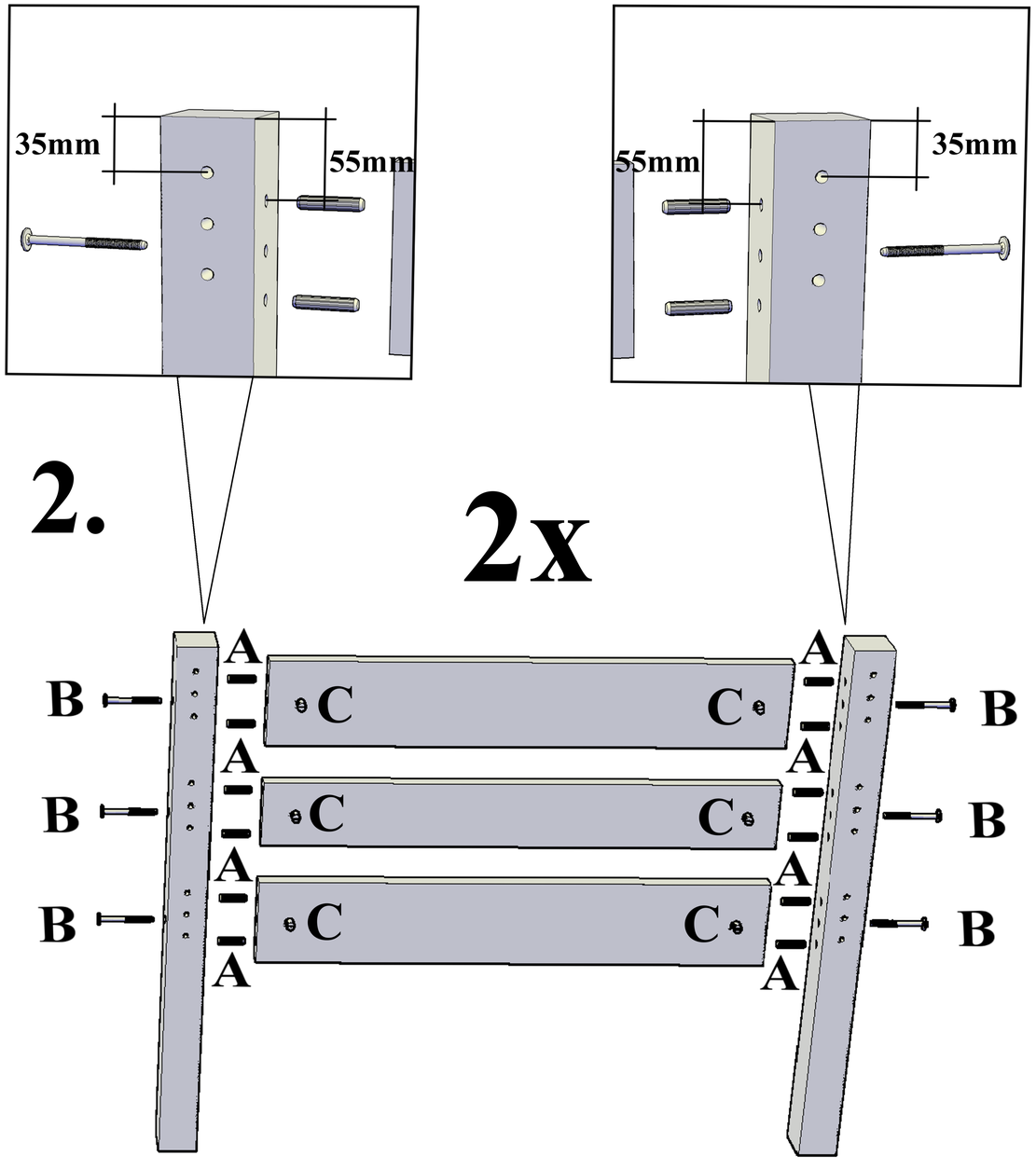

3.

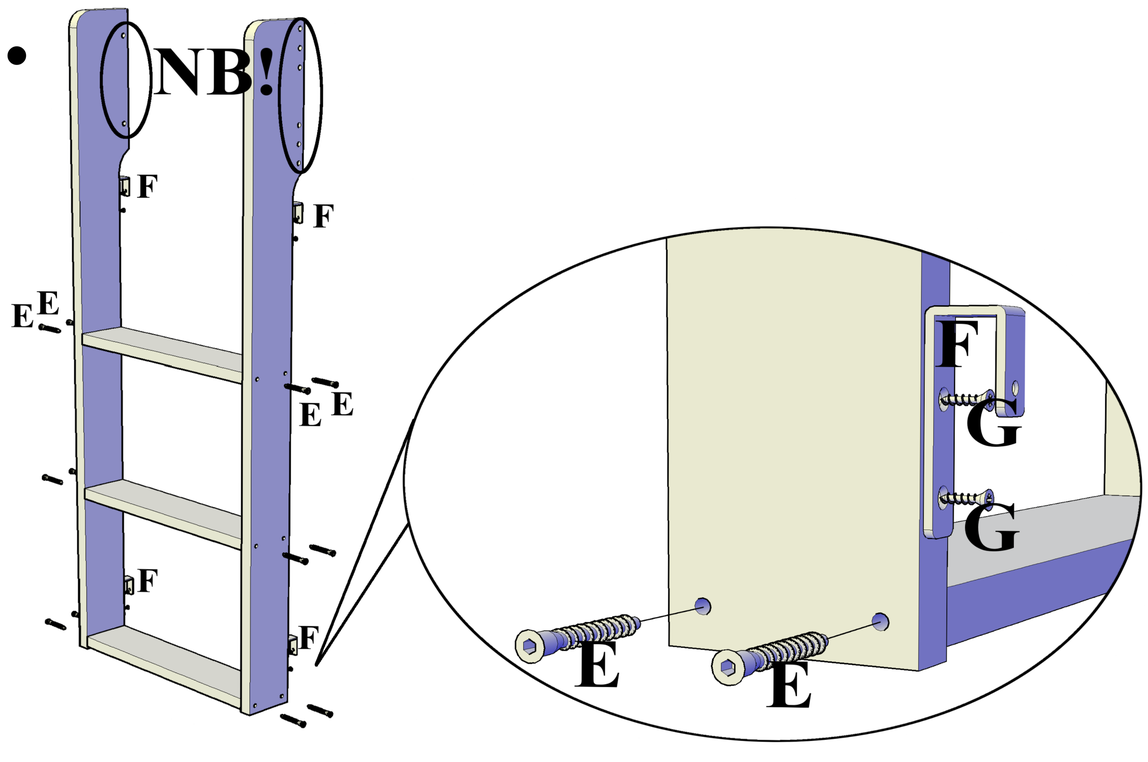
NB!
F
F
E
E
E
E
F
F
F
G
G
E
E

4.

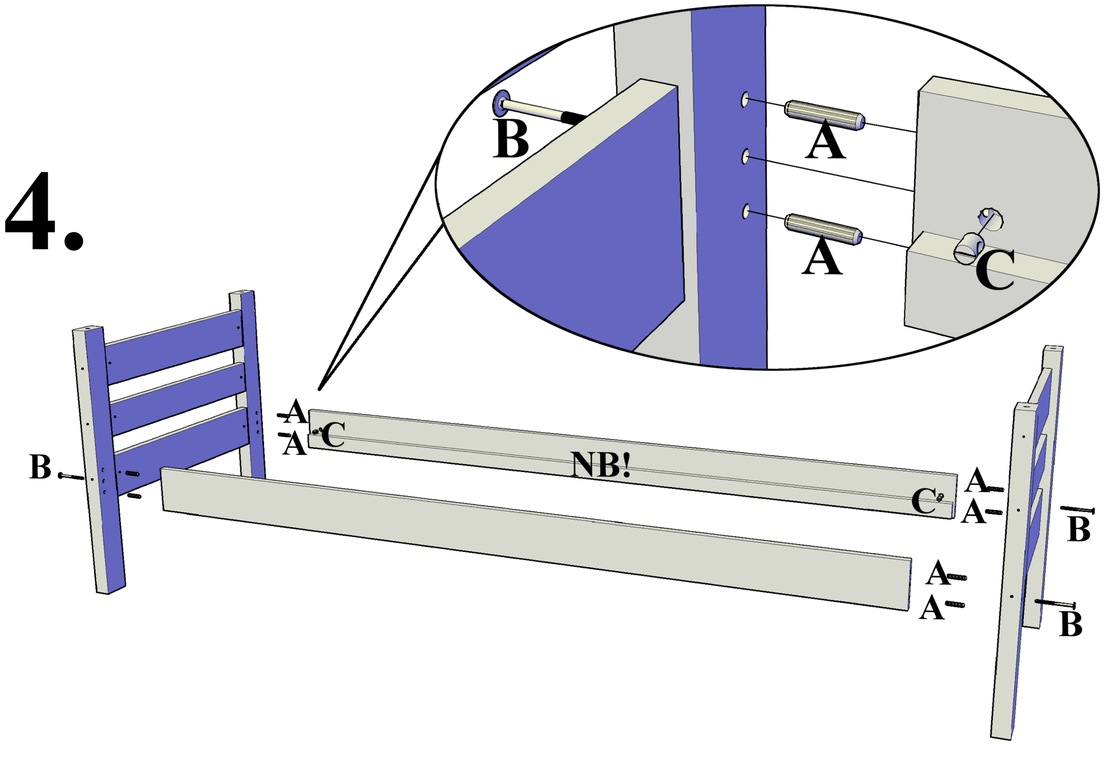
B
A
A
A
C
NB!
C
A
A
B
A
A
B
B

5.

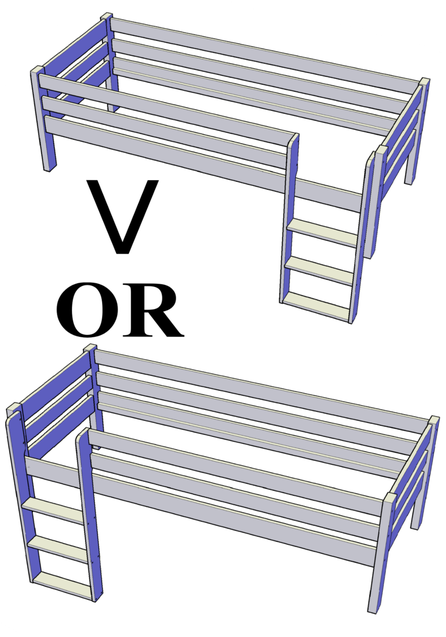
V
OR

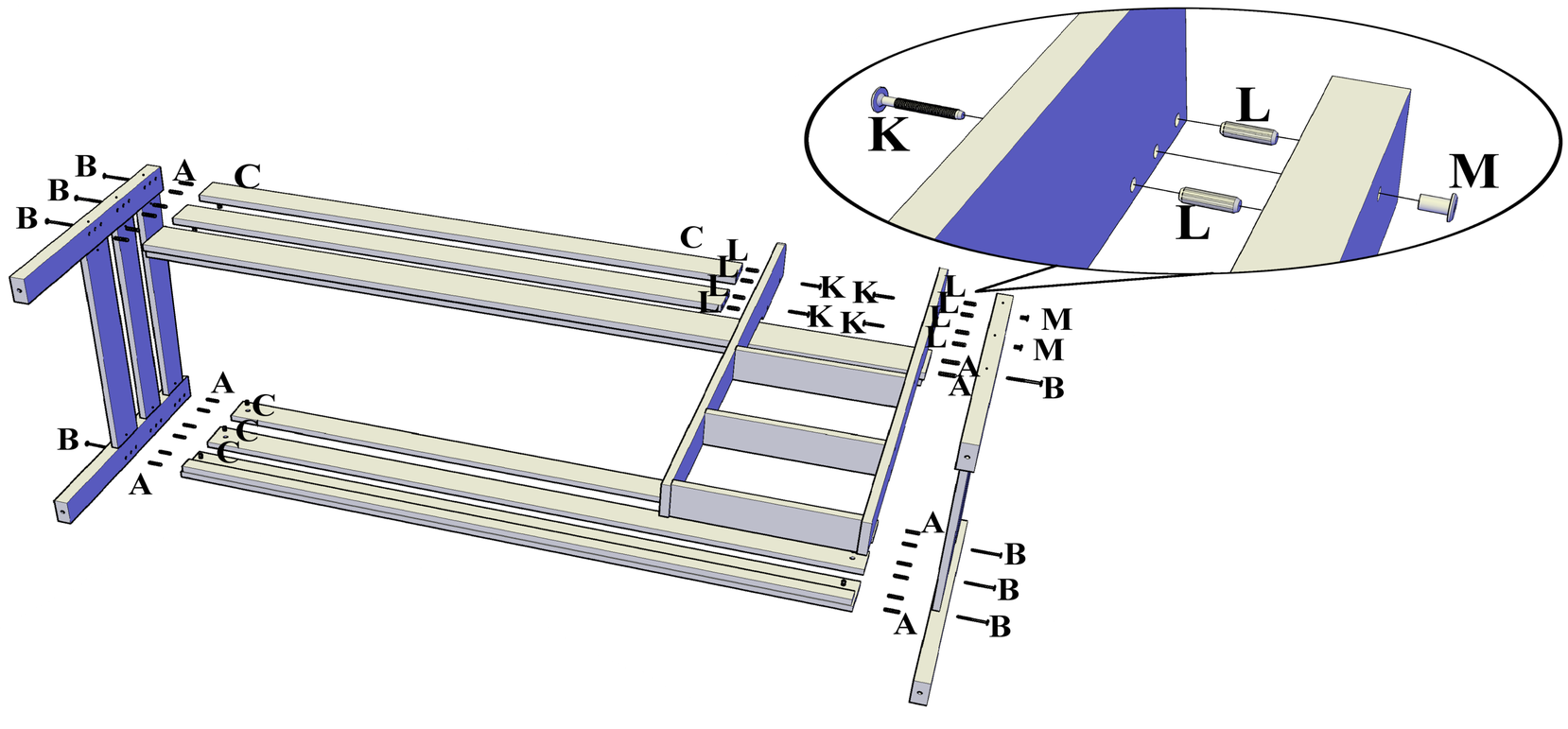
K
L
L
M
B
B
B
A
C
C
L
L
L
K
K
K
K
L
L
L
M
M
A
A
B
B
A
C
C
C
A
A
B
B
A
B
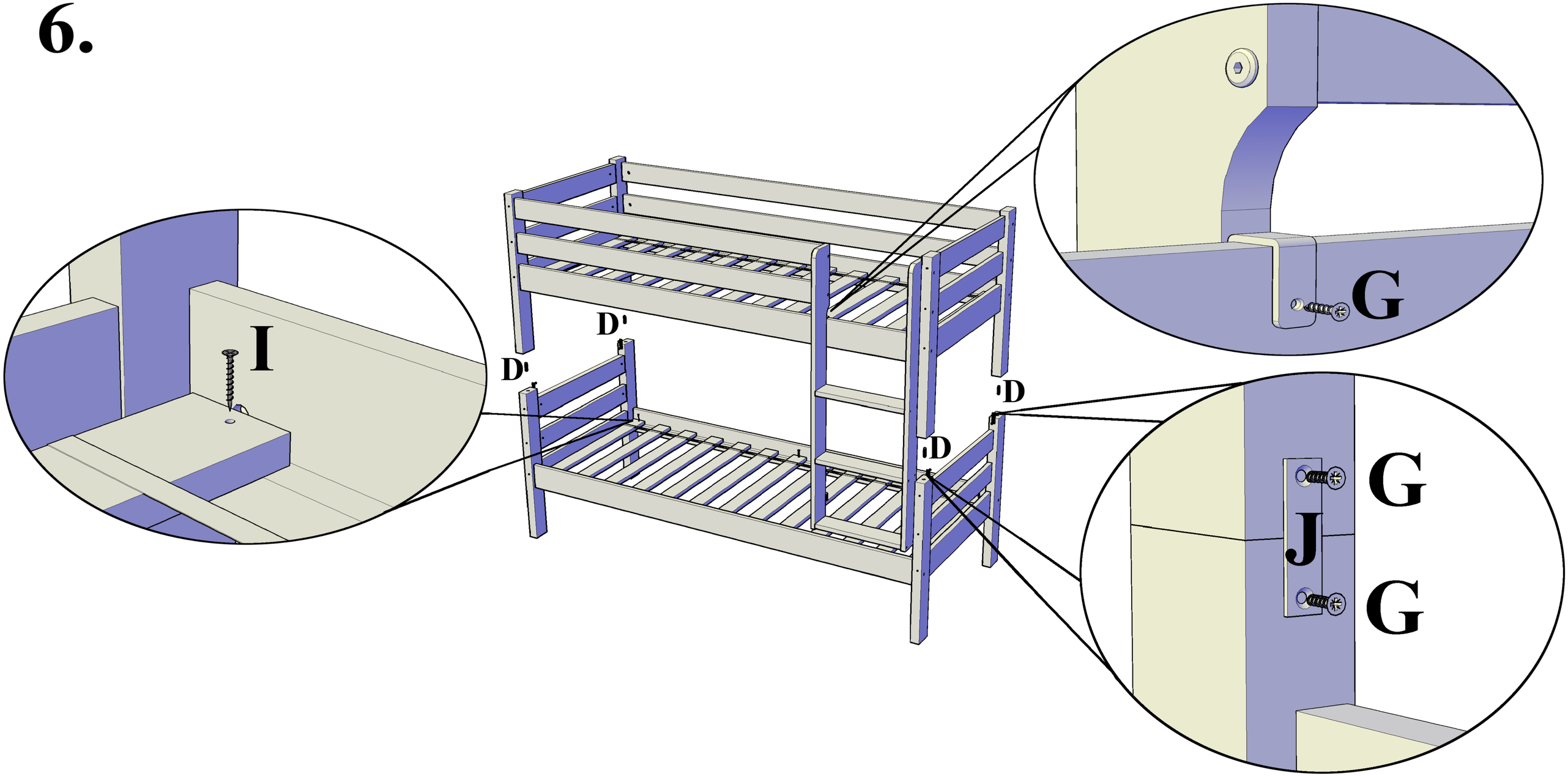
6.